REV.	DESCRIPTION	DATE	DRAFTER	APPROVER
A1	DWG.REL	2020.05.22	LiuZH	JIN

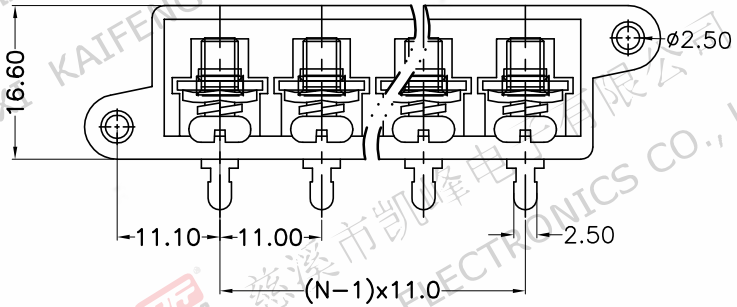

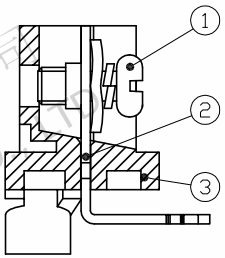

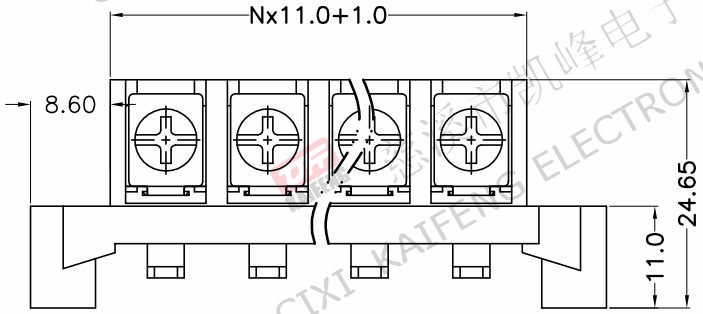

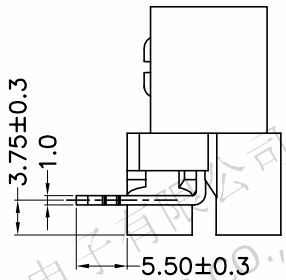

- Material
  ①Screws : M4.0 steel, Ni plated
  ②Terminal : Brass, Gold plated
  ③Housing : PA66,UL94V−0
- Electrical IEC
  Rated voltage : 300V 250V
  Rated current : 30A 41A
  Contact resistance : 20mΩ(Max)
  Insulation resistance: 500MΩ/DC500V
  Withstanding Voltage : AC2000V/1min
  Wire range: 22−10AWG 6.0mm²
- Mechanical
  Operating temperature:−40℃∽+105℃
  Soldering temperature:250℃±5/5sec
  Torque: 1.2N.m (10.53Lb.in)
- RoHS compliance

HOW TO ORDER

KF−11−11.0−XXP−1 X−XXXXX

- MODEL
- Pitch:mm
- No.of poles: 2~24P
- 1:Single Pitch 2:Double Pitch
- Color: G:Green R:Red K:Black W:White O:Orange B:Blue GR:Gray
- Customer Request

Pitch range			Nominal dimension range						
>0 ~ 6	>6 ~ 10	>10 ~ 24	>0 ~ 30	>30 ~ 60	>60 ~ 100	>100 ~ 150	>150		0.1/10
±0.15	±0.20	±0.30	±0.30	±0.50	±0.70	±1.00	±1.30		±2°

DRAWING TYPE	CUSTOMER DRAWING		
SCALE	1:1	SHEET	1 OF 1
DRAWING NO.	W12001112		

PROJECTION		TITLE	KF−11−11.00−XXP−1X
UNIT	mm		
SHEET SIZE	A4	SERIES	KF−11

慈溪市凯峰电子有限公司
CIXI KAIFENG ELECTRONICS CO.,LTD